VKS

VKSA

Stačiakampiai kanaliniai ventiliatoriai

Rectangular duct fans

Rechteckige Kanalventilatoren

Прямоугольные канальные вентиляторы

VKS

Stačiakampiai kanaliniai ventiliatoriai, skirti vėdinimo ir oro kondicionavimo sistemoms, montuojami į stačiakampių ortakių sistemą. Naudojami oro tiekimui ir šalinimui. Nenaudojami užteršto oro, agresyvių, sprogių dujų transportavimui. Kompaktiški, tyliai dirbantys, montuojami bet kokioje padėtyje, sparnuotė lengvai iškeliama valymui.

Sparnuotė: į priekį lenktais sparneliais, cinkuoto plieno.

Variklis: išorinis rotorius, tiesioginė pavara, integruota termokontaktinė variklio apsauga, ilgai tarnaujantys nereikalaujantys priežiūros guoliai.

Korpusas: iš cinkuotos skardos.

VKSA

Garsinė izoliacija: akmens vata, 50mm storio.

Žemas triukšmo lygis.

VKS

Rechteckige Kanalventilatoren, die für Lüftungs- und Klimaanlagen bestimmt sind, werden in das System der rechteckigen Luftführungskanäle montiert. Sie werden für Zuluft und Abluft verwendet. Nicht geeignet für die Beförderung von verschmutzter Luft, aggressiven, explosiven Gasen. Kompakt, leise funktionierend, Montage in jeder beliebigen Stellung, das Flügelwerk ist leicht zur Reinigung herausnehmbar.

Laufrad ist vorwärts gekrümmt, aus verzinktem Stahl.

Der Motor: Außenrotor, Direktantrieb, integrierter Thermokontakt-Motorschutz, dauerhafte, keine Pflege erfordernde Lager.

Das Gehäuse: aus verzinktem Blech.

VKSA

Schallisolation: Steinwatte, 50mm dick.

Niedriges Geräuschniveau.

VKS

Rectangular duct fans for ventilation and air conditioning systems, mounted into a system of rectangular air ducts. Used for the air supply or extract. Not suitable for polluted air, aggressive and explosive gases. Compact, with low noise level, mounted in any position, simple access to clean an impeller.

Impeller with forward curved blades made of galvanized steel.

Motor: external rotor, motor protection built-in thermal-contact, free-maintenance ball bearings.

Housing: made of galvanized steel.

VKSA

Sound insulation: rock wool, 50 mm thickness.

Low noise level.

VKS

Прямоугольные канальные вентиляторы для систем вентиляции и кондиционирования, устанавливаются в систему прямоугольных воздуховодов. Эксплуатируются в целях подачи и вытяжки воздуха. Не используются при транспортировке загрязнённого воздуха, агрессивных, взрывоопасных газов. Компактные, бесшумные, устанавливаются в любом положении, крыльчатка легко извлекается для чистки.

Крыльчатка: загнутые вперёд лопатки, оцинкованная сталь.

Двигатель: наружный ротор, прямая передача, встроенные термоконтакты двигателя, не требующие ухода подшипники с длительным сроком службы.

Корпус: оцинкованной жести.

VKSA

Звукоизоляция: минеральная вата толщиной 50 мм.

Низкий уровень шума

Accessories

LJ/E
LJ/PG
p. 198-199

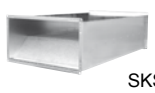

SKS
p. 168

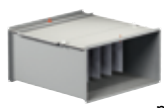

FDS
p. 162

EKS
p. 132

TGRV
p. 153

TGRT
p. 154

The company reserves the right to make changes of technical data without prior notice

VKS

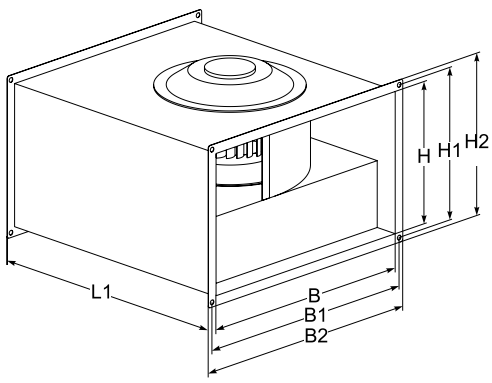

VKSA

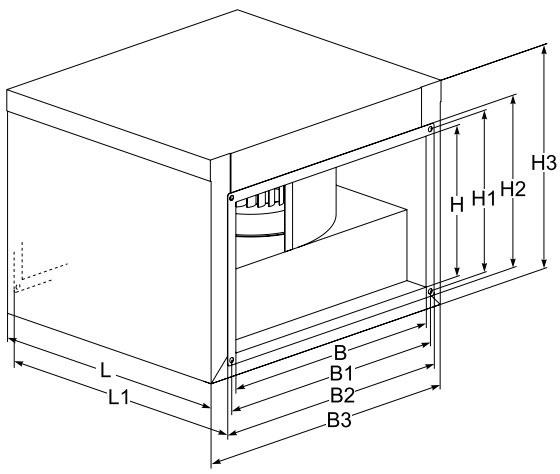

VKS

Type	Dimensions [mm]						
	B	B1	B2	H	H1	H2	L1
VKS 400x200	400	420	440	200	220	240	445
VKS 500x250	500	520	540	250	270	290	530
VKS 500x300	500	520	540	300	320	340	560
VKS 600x300	600	620	640	300	320	340	640
VKS 600x350	600	620	640	350	370	390	700
VKS 700x400	700	720	740	400	420	440	780
VKS 800x500	800	820	840	500	520	540	880
VKS 1000x500	1000	1020	1040	500	520	540	980

VKSA

Type	Dimensions [mm]									
	B	B1	B2	B3	H	H1	H2	H3	L	L1
VKSA 400x200	400	420	440	507	200	220	240	338	417	445
VKSA 500x250	500	520	540	605	250	270	290	393	502	530
VKSA 500x300	500	520	540	605	300	320	340	443	532	560
VKSA 600x300	600	620	640	705	300	320	340	443	612	640
VKSA 600x350	600	620	640	705	350	370	390	493	672	700
VKSA 700x400	700	720	740	811	400	420	440	562	752	780
VKSA 800x500	800	820	840	911	500	520	540	662	852	880
VKSA 1000x500	1000	1020	1040	1110	500	520	540	662	952	980

Accessories

MTY
p. 156

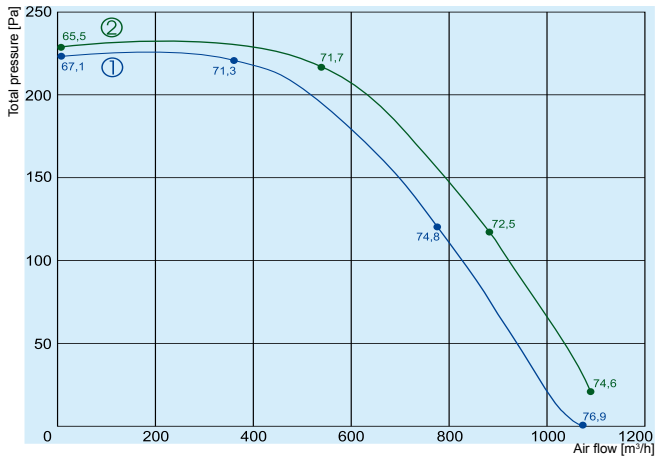

① VKS/VKSA 400x200-4 L1

② VKS/VKSA 400x200-4 L3

		400x200-4 L1	400x200-4 L3
Voltage/Frequency	[V/Hz]	230/50	400/50
Power consumption	[kW]	0,36	0,31
Current	[A]	1,80	0,51
Speed	[min^{-1}]	1180	1230
Max. airflow	[m^3/h]	1079	1090
Max. air temperature	[°C]	40	70
Total sound pressure level at 1 m	[dBA]	64	63
Speed controller		TGRV1,5 / MTY2	TGRT1
Weight	[kg]	14 / 21	14 / 21
Wiring diagram		No. 1	No. 2
Protection class:	motor	IP-54	IP-54
	terminal box	IP-55	IP-55

400x200-4 L1	L_{pa} dB(A)	L_{wa} total dB(A)	L_{wa}, dB(A)							
			100 Hz	125 Hz	250 Hz	500 Hz	1 kHz	2 kHz	4 kHz	5 kHz
Inlet	62	69	41	43	51	57	61	54	51	52
Outlet	64	71	44	44	53	58	65	59	57	57
VKS casing break out	52	59	27	29	38	47	51	47	43	42
VKSA casing break out	36	43	20	22	31	37	40	37	35	35

Measured at 365 m^3/h, 222 Pa

400x200-4 L3	L_{pa} dB(A)	L_{wa} total dB(A)	L_{wa}, dB(A)							
			100 Hz	125 Hz	250 Hz	500 Hz	1 kHz	2 kHz	4 kHz	5 kHz
Inlet	61	68	29	37	49	55	59	53	49	50
Outlet	63	70	32	38	51	57	63	58	55	55
VKS casing break out	51	58	16	23	37	46	49	46	40	40
VKSA casing break out	35	42	11	17	30	35	38	37	32	33

Measured at 497 m^3/h, 210 Pa

The fan characteristic curves were determined in accordance with DIN 24163 resp. ISO 5801. The sound power levels were determined in accordance with DIN 45635 resp. ISO 3744 at a distance of 1 m from the fan

The company reserves the right to make changes of technical data without prior notice

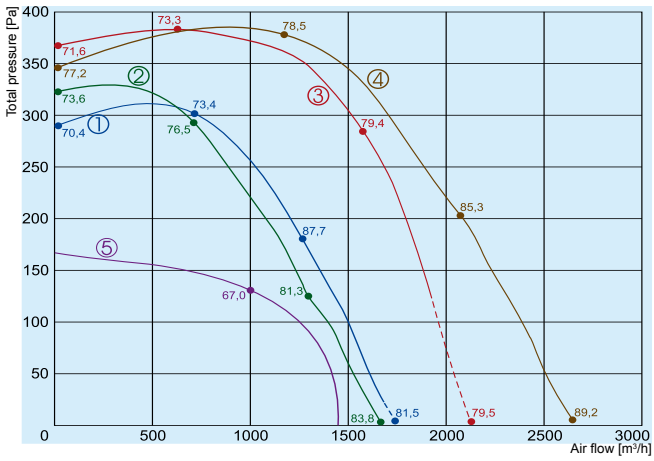

① VKS/VKSA 500x250-4 L1
② VKS/VKSA 500x250-4 L3
③ VKS/VKSA 500x300-4 L1
④ VKS/VKSA 500x300-4 L3
⑤ VKS/VKSA 500x300-6 L1

		500x250-4 L1	500x250-4 L3	500x300-4 L1	500x300-4 L3	500x300-6 L1
Voltage/Frequency	[V/Hz]	230/50	400/50	230/50	400/50	230/50
Power consumption	[kW]	0,51	0,56	0,69	0,93	0,29
Current	[A]	2,3	0,95	3,0	1,90	1,47
Speed	[min⁻¹]	1250	1270	1190	1380	680
Max. airflow	[m³/h]	1651	1665	1883	2647	1400
Max. air temperature	[°C]	40	40	40	50	50
Total sound pressure level at 1 m	[dBA]	66	69	68	72	48
Speed controller		TGRV3 / MTY4	TGRT1	TGRV4 / MTY4	TGRT2	TGRV 3
Weight	[kg]	16 / 23	16 / 23	21 / 28	21 / 28	21 / 28
Wiring diagram		No. 1	No. 2	No. 1	No. 2	No. 1
Protection class:	motor	IP-54	IP-54	IP-54	IP-54	IP-54
	terminal box	IP-55	IP-55	IP-55	IP-55	IP-55

500x250-4 L1	Lpa dB(A)	Lwa total dB(A)	Lwa, dB(A)							
			100 Hz	125 Hz	250 Hz	500 Hz	1 kHz	2 kHz	4 kHz	5 kHz
Inlet	63	70	50	44	50	58	59	55	53	51
Outlet	66	73	51	45	51	63	67	61	60	59
VKS casing break out	52	59	34	32	40	53	51	44	49	46
VKSA casing break out	38	45	29	27	33	43	44	38	42	40

Measured at 673 m³/h, 306 Pa

500x250-4 L3	Lpa dB(A)	Lwa total dB(A)	Lwa, dB(A)							
			100 Hz	125 Hz	250 Hz	500 Hz	1 kHz	2 kHz	4 kHz	5 kHz
Inlet	65	72	40	47	53	59	62	59	56	55
Outlet	69	76	40	48	54	64	70	65	63	63
VKS casing break out	55	62	25	35	43	52	55	48	46	46
VKSA casing break out	42	49	20	30	35	44	47	41	40	41

Measured at 732 m³/h, 289 Pa

500x300-4 L1	Lpa dB(A)	Lwa total dB(A)	Lwa, dB(A)							
			100 Hz	125 Hz	250 Hz	500 Hz	1 kHz	2 kHz	4 kHz	5 kHz
Inlet	65	72	53	50	52	55	59	58	58	56
Outlet	68	75	51	51	55	62	67	63	64	60
VKS casing break out	56	63	41	37	50	50	54	47	46	42
VKSA casing break out	42	49	34	33	37	43	44	39	39	35

Measured at 1034 m³/h, 370 Pa

500x300-4 L3	Lpa dB(A)	Lwa total dB(A)	Lwa, dB(A)							
			100 Hz	125 Hz	250 Hz	500 Hz	1 kHz	2 kHz	4 kHz	5 kHz
Inlet	69	76	45	55	54	60	65	63	62	63
Outlet	72	79	42	54	57	65	71	67	67	66
VKS casing break out	57	64	33	38	50	50	55	51	49	49
VKSA casing break out	46	53	26	35	40	44	48	43	42	41

Measured at 1180 m³/h, 377 Pa

The fan characteristic curves were determined in accordance with DIN 24163 resp. ISO 5801. The sound power levels were determined in accordance with DIN 45635 resp. ISO 3744 at a distance of 1 m from the fan

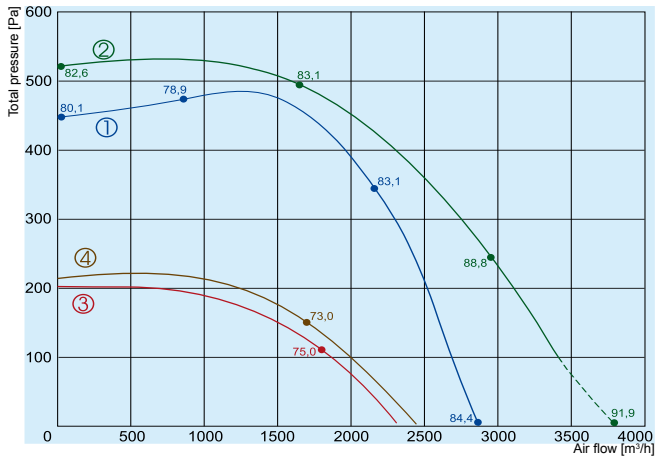

① VKS/VKSA 600x300-4 L1
② VKS/VKSA 600x300-4 L3
③ VKS/VKSA 600x300-6 L1
④ VKS/VKSA 600x300-6 L3

		600x300-4 L1	600x300-4 L3	600x300-6 L1	600x300-6 L3
Voltage/Frequency	[V/Hz]	230/50	400/50	230/50	400/50
Power consumption	[kW]	1,15	1,50	0,47	0,42
Current	[A]	5,10	2,60	2,21	0,86
Speed	[min⁻¹]	1210	1310	900	835
Max. airflow	[m³/h]	2882	3800	2300	2450
Max. air temperature	[°C]	40	40	70	40
Total sound pressure level at 1 m	[dBA]	72	76	55	49
Speed controller		TGRV7	TGRT3	TGRV 3	TGRT2
Weight	[kg]	29 / 37	29 / 37	31/38	25/32
Wiring diagram		No. 1	No. 2	No. 1	No. 2
Protection class:	motor	IP-54	IP-54	IP-54	IP-54
	terminal box	IP-55	IP-55	IP-55	IP-55

600x300-4 L1	L_{pa} dB(A)	L_{wa} total dB(A)	L_{wa}, dB(A)							
			100 Hz	125 Hz	250 Hz	500 Hz	1 kHz	2 kHz	4 kHz	5 kHz
Inlet	69	76	67	59	54	61	66	64	61	59
Outlet	72	79	68	59	57	65	70	67	66	64
VKS casing break out	57	64	50	44	49	52	57	50	47	46
VKSA casing break out	47	54	44	37	41	44	48	44	41	40

Measured at 878 m³/h, 474 Pa

600x300-4 L3	L_{pa} dB(A)	L_{wa} total dB(A)	L_{wa}, dB(A)							
			100 Hz	125 Hz	250 Hz	500 Hz	1 kHz	2 kHz	4 kHz	5 kHz
Inlet	73	80	52	64	58	65	70	69	66	64
Outlet	76	83	53	64	61	69	74	72	71	69
VKS casing break out	61	68	35	49	49	52	61	55	52	51
VKSA casing break out	51	58	33	42	42	46	53	48	45	45

Measured at 1654 m³/h, 495 Pa

The fan characteristic curves were determined in accordance with DIN 24163 resp. ISO 5801. The sound power levels were determined in accordance with DIN 45635 resp. ISO 3744 at a distance of 1 m from the fan

The company reserves the right to make changes of technical data without prior notice

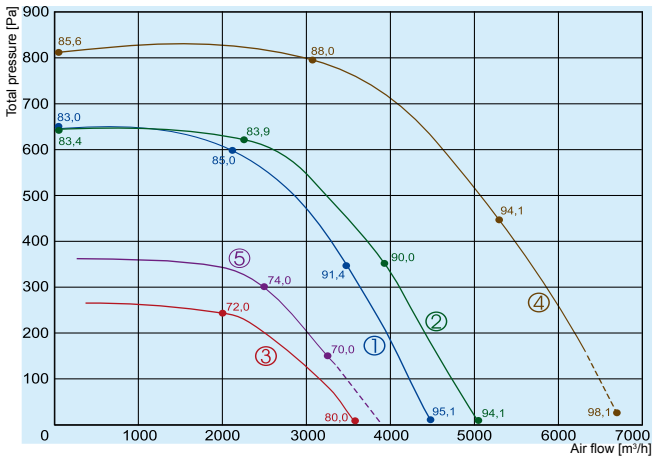

① VKS/VKSA 600x350-4 L1
② VKS/VKSA 600x350-4 L3
③ VKS/VKSA 600x350-6 L3
④ VKS/VKSA 700x400-4 L3
⑤ VKS/VKSA 700x400-6 L3

		600x350-4 L1	600x350-4 L3	600x350-6 L3	700x400-4 L3	700x400-6 L3
Voltage/Frequency	[V/Hz]	230/50	400/50	400/50	400/50	400/50
Power consumption	[kW]	2,40	2,50	0,90	3,70	1,1
Current	[A]	11,0	4,10	1,8	6,0	2,0
Speed	[min⁻¹]	1340	1300	750	1320	790
Max. airflow	[m³/h]	4478	5056	3600	6300	3250
Max. air temperature	[°C]	40	40	40	40	40
Total sound pressure level at 1 m	[dBA]	78	77	71	81	67
Speed controller		TGRV14	TGRT5	TGRT2	TGRT7	TGRT3
Weight	[kg]	36 / 47	36 / 47	24/31	62 / 78	32 / 39
Wiring diagram		No. 1	No. 2	No. 2	No. 2	No. 2
Protection class:	motor	IP-54	IP-54	IP-54	IP-54	IP-54
	terminal box	IP-55	IP-55	IP-55	IP-55	IP-55

600x350-4 L1	Lpa dB(A)	Lwa total dB(A)	Lwa, dB(A)							
			100 Hz	125 Hz	250 Hz	500 Hz	1 kHz	2 kHz	4 kHz	5 kHz
Inlet	74	81	56	63	59	64	73	71	69	67
Outlet	78	85	57	63	62	70	78	74	73	71
VKS casing break out	62	69	44	50	47	54	61	57	56	55
VKSA casing break out	53	60	38	44	40	48	54	50	49	48

Measured at 2015 m³/h, 606 Pa

600x350-4 L3	Lpa dB(A)	Lwa total dB(A)	Lwa, dB(A)							
			100 Hz	125 Hz	250 Hz	500 Hz	1 kHz	2 kHz	4 kHz	5 kHz
Inlet	73	80	56	61	59	64	72	69	67	66
Outlet	77	84	56	62	62	70	77	72	72	70
VKS casing break out	61	68	43	49	47	54	60	55	55	54
VKSA casing break out	52	59	36	41	40	47	53	48	48	47

Measured at 2260 m³/h, 622 Pa

700x400-4 L3	Lpa dB(A)	Lwa total dB(A)	Lwa, dB(A)							
			100 Hz	125 Hz	250 Hz	500 Hz	1 kHz	2 kHz	4 kHz	5 kHz
Inlet	76	83	60	60	66	68	76	73	69	68
Outlet	81	88	61	63	68	74	81	77	75	73
VKS casing break out	68	75	48	46	58	65	67	61	60	58
VKSA casing break out	58	65	41	41	49	55	58	54	52	51

Measured at 3083 m³/h, 797 Pa

The fan characteristic curves were determined in accordance with DIN 24163 resp. ISO 5801. The sound power levels were determined in accordance with DIN 45635 resp. ISO 3744 at a distance of 1 m from the fan

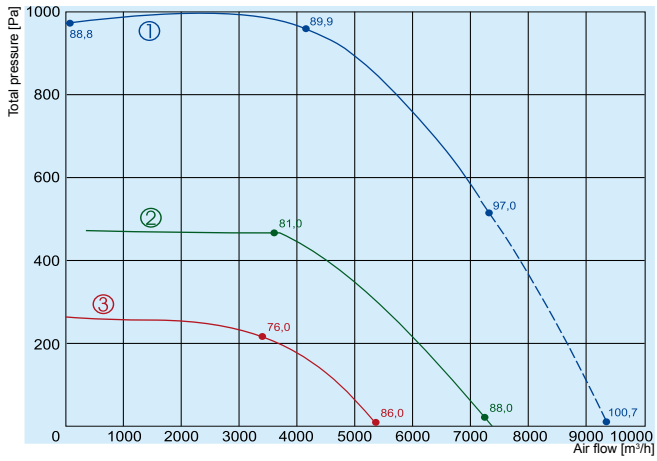

① VKS/VKSA 800x500-4 L3

② VKS/VKSA 800x500-6 L3

③ VKS/VKSA 800x500-8 L3

		800x500-4 L3	800x500-6 L3	800x500-8 L3
Voltage/Frequency	[V/Hz]	400/50	400/50	400/50
Power consumption	[kW]	5,0	2,7	1,14
Current	[A]	8,10	4,9	2,4
Speed	[min^{-1}]	1330	830	555
Max. airflow	[m^3/h]	7120	7250	4500
Max. air temperature	[°C]	40	50	40
Total sound pressure level at 1 m	[dBA]	83	77	69
Speed controller		TGRT11	TGRT5	TGRT3
Weight	[kg]	85 / 99	52 / 59	63 / 70
Wiring diagram		No. 2	No. 2	No. 2
Protection class:	motor	IP-54	IP-54	IP-54
	terminal box	IP-55	IP-55	IP-55

800x500-4 L3	L_{pa} dB(A)	L_{wa} total dB(A)	L_{wa}, dB(A)							
			100 Hz	125 Hz	250 Hz	500 Hz	1 kHz	2 kHz	4 kHz	5 kHz
Inlet	79	86	64	65	64	69	80	74	71	71
Outlet	83	90	64	68	69	75	83	79	77	75
VKS casing break out	68	75	53	54	54	62	68	62	59	59
VKSA casing break out	61	68	47	48	50	56	63	56	53	53

Measured at 4152 m^3/h, 959 Pa

The fan characteristic curves were determined in accordance with DIN 24163 resp. ISO 5801. The sound power levels were determined in accordance with DIN 45635 resp. ISO 3744 at a distance of 1 m from the fan

The company reserves the right to make changes of technical data without prior notice

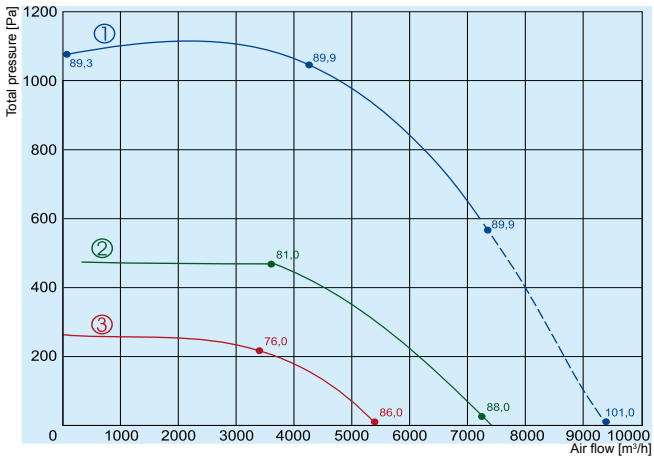

① VKS/VKSA 1000x500-4 L3

② VKS/VKSA 1000x500-6 L3

③ VKS/VKSA 1000x500-8 L3

		1000x500-4 L3	1000x500-6 L3	1000x500-8 L3
Voltage/Frequency	[V/Hz]	400/50	400/50	400/50
Power consumption	[kW]	5,0	2,7	1,14
Current	[A]	8,10	4,9	2,40
Speed	[min⁻¹]	1330	830	555
Max. airflow	[m³/h]	7200	7200	5380
Max. air temperature	[°C]	40	50	40
Total sound pressure level at 1 m	[dBA]	83	77	59
Speed controller		TGRT11	TGRT5	TGRT3
Weight	[kg]	88 / 111	53 / 60	64 / 71
Wiring diagram		No. 2	No. 2	No. 2
Protection class:	motor	IP-54	IP-54	IP-54
	terminal box	IP-55	IP-55	IP-55

1000x500-4 L3	L_{pa} dB(A)	L_{wa} total dB(A)	L_{wa}, dB(A)							
			100 Hz	125 Hz	250 Hz	500 Hz	1 kHz	2 kHz	4 kHz	5 kHz
Inlet	78	85	59	64	64	68	76	73	69	69
Outlet	83	90	62	67	69	77	83	79	76	74
VKS casing break out	68	75	48	55	55	65	69	62	59	59
VKSA casing break out	62	69	45	49	51	59	63	56	53	53

Measured at 4040 m³/h, 1063 Pa

The fan characteristic curves were determined in accordance with DIN 24163 resp. ISO 5801. The sound power levels were determined in accordance with DIN 45635 resp. ISO 3744 at a distance of 1 m from the fan

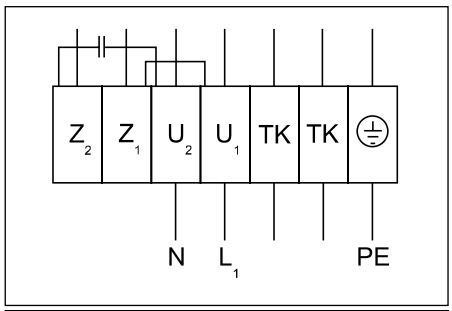

Wiring diagram No. 1 (1~230V)

U_1 = brown
U_2 = blue
Z_1 = black
Z_2 = orange
TK = white

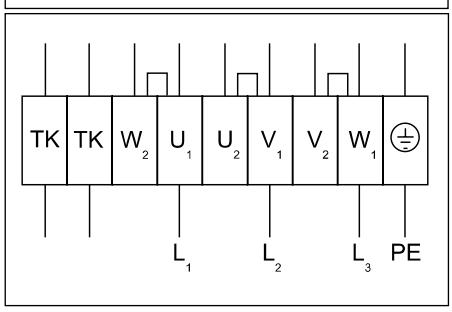

Wiring diagram No. 2 (Δ – 3~230V)

U_1 = brown
U_2 = red
V_1 = blue
V_2 = grey
W_1 = black
W_2 = orange
TK = white

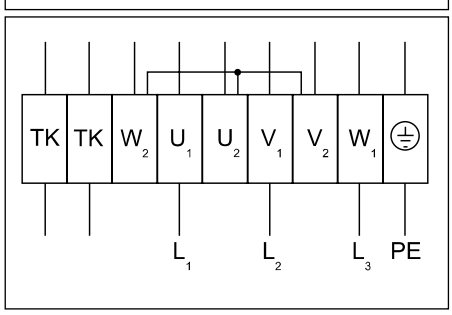

Wiring diagram No. 2 (Y - 3~400V)

U_1 = brown
U_2 = red
V_1 = blue
V_2 = grey
W_1 = black
W_2 = orange
TK = white

The company reserves the right to make changes of technical data without prior notice